BRONZE, CENTRIFUGAL, COMMERCIAL POOL PUMP P2000

Pahlén

112201 • 112211 • 112221 • 115201-01 • 115211-01 • 115221-01

With prefilter

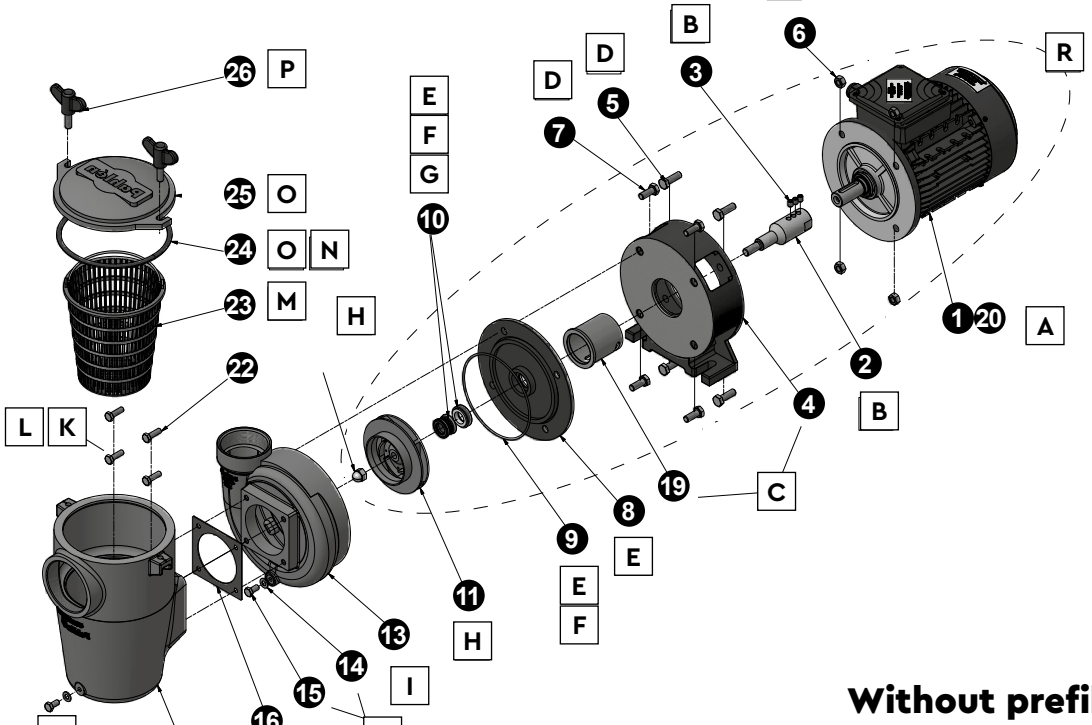

Without prefilter

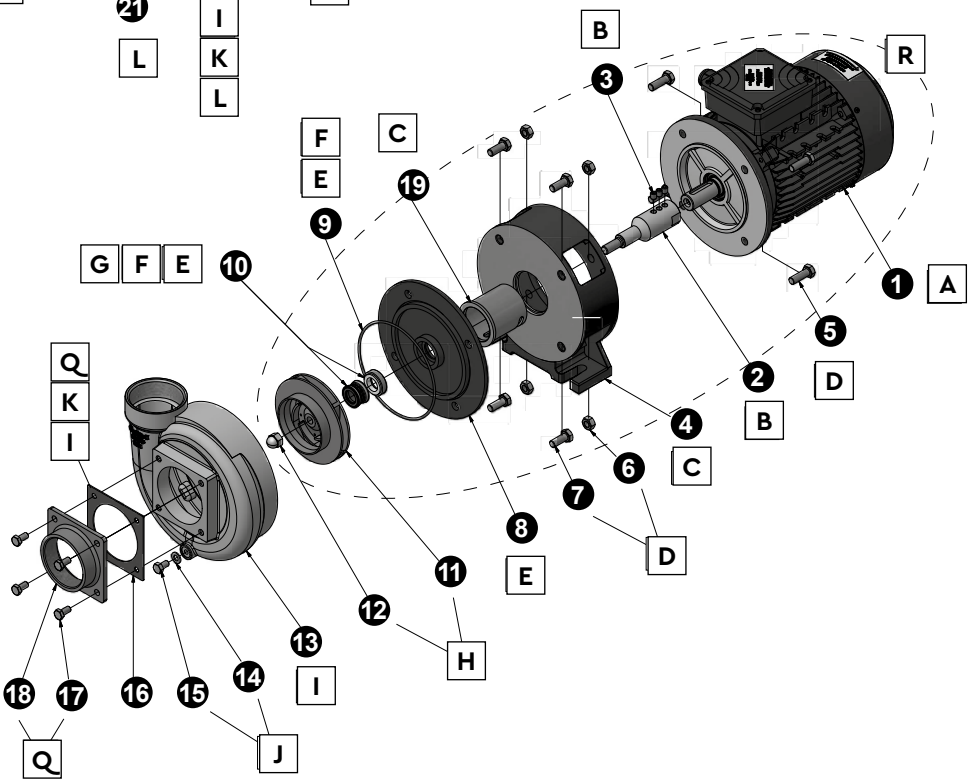

	No.	Description	Code
A	1	Motor 1,5kW 3-phase 400/230/50-460/265/60 A200/24	631365
		Motor 2,2kW 3-phase 400/230/50-460/265/60 A200/24	631366
		Motor 4,0kW 3-phase 690/400/50-460/60 A200/24	631370
B	2 + 3	Shaft with setscrews	636001
C	4 + 19	Intermediaplate + Protective cover for shaft	636003
D	5 + 6 + 7 + 22	Assembly kit, screws and nuts	636002
E	8 + 9 + 10	Sealplate + O'ring + Shaft seal	636004
F	9 + 10	O'ring + Shaft seal	631000
G	10	Shaft seal	631001
		Shaft seal Nic-Tech	631049
H	11 + 12	Impeller 1.5kW + Domed nut M12 – 50Hz IE2	631003
		Impeller 1.5kW + Domed nut M12 – 50Hz IE3	631143
		Impeller 1.5kW + Domed nut M12 – 60Hz IE2	631164
		Impeller 1.5kW + Domed nut M12 – 60Hz IE3	631165
		Impeller 2.2kW + Domed nut M12 – 50Hz IE2	631004
		Impeller 2.2kW + Domed nut M12 – 50Hz IE3	631144
		Impeller 2.2kW + Domed nut M12 – 60Hz IE2	631166
		Impeller 2.2kW + Domed nut M12 – 60Hz IE3	631167
		Impeller 4.0kW + Domed nut M12 – 50Hz IE2	631005
		Impeller 4.0kW + Domed nut M12 – 50Hz IE3	631145
		Impeller 4.0kW + Domed nut M12 – 60Hz IE2	631168
		Impeller 4.0kW + Domed nut M12 – 60Hz IE3	631169
I	13 + 16	Pump housing + Packing	631006
J	14 + 15	Drain plug M8×12	631002
K	16	Packing (pump housing)	631007
L	21 + 16 + 22	Prefilter housing + Packing + Screws 4pcs	631009
M	23	Strainer basket	631010
N	24	O'ring (lid)	631011
O	24 + 25	Lid + O'ring	631012
P	26	Thumb screw M10, 2pcs	631013
Q	18 + 17 + 16	Pipe connection + Screws 4pcs + Packing	631008
R	1–12 + 20	Drive end 1.5kW 50Hz 3-phase IE3	631100
		Drive end 1.5kW 60Hz 3-phase IE3	631101
		Drive end 2.2kW 50Hz 3-phase IE3	631097
		Drive end 2.2kW 60Hz 3-phase IE3	631098
		Drive end 4.0kW 50Hz 3-phase IE3	631099
		Drive end 4.0kW 60Hz 3-phase IE3	631140